440 FLEX OMNI

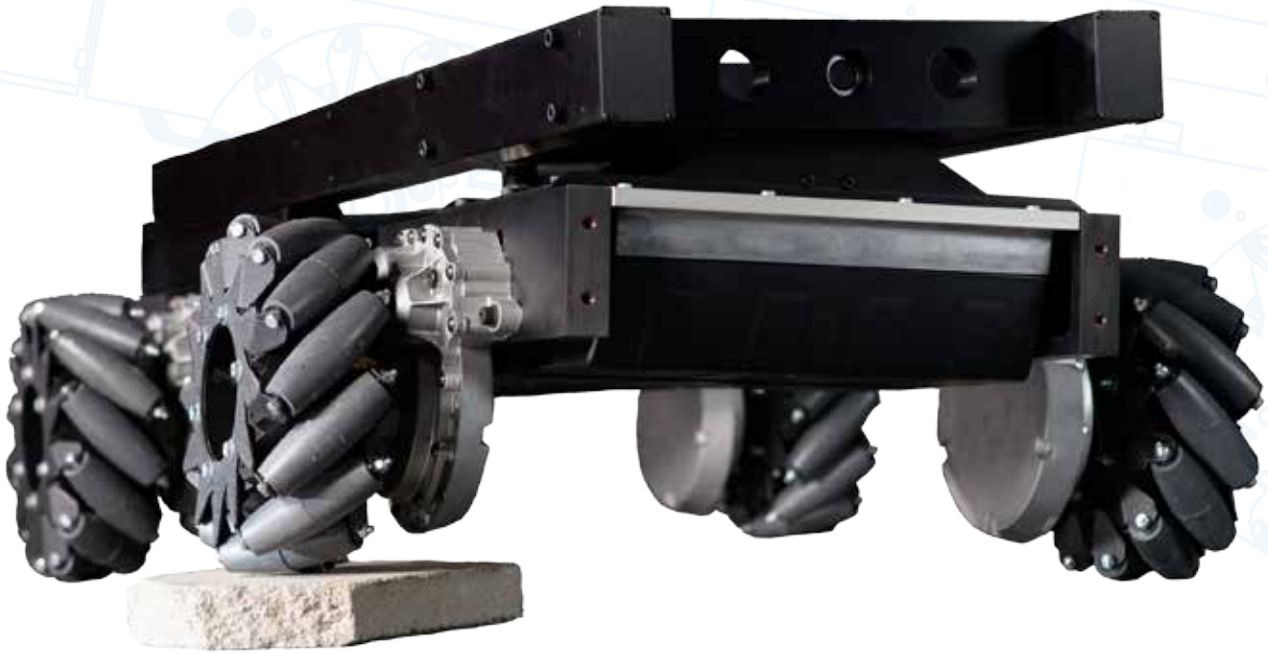

Reliable

The RMP 440 Flex Omni leverages all of the redundant safety features of the Segway® Personal Transporter (PT). The motor controllers and brushless DC drive motors are each fully redundant, allowing component failures to be handled smoothly and safely.

Five lithium-ion batteries provide a run time of ~8 hours of operation or ~24 hours in standby. To charge the batteries, simply connect the charger cable.

Omni-Directional

The RMP 440 Flex Omni seems to float across the ground. Its four Mecanum wheels allow it to move in any direction without needing to turn — and it can turn in place just as easily as it can drive sideways. It's ideal for applications where payload orientation is the primary concern.

Whether you're transporting heavy payloads, maneuvering sensors or operating robotic manipulators, the RMP 440 Flex Omni can quickly and efficiently orient your equipment to meet your requirements.

Powerful

With a peak torque of 100 N-m per wheel, the RMP 440 Flex Omni is capable of moving payloads up to 450 kg (1000 lbs).

Controlled

All this power is under your control via commands sent over Ethernet, USB or CAN bus. The RMP acts as a single unit as it receives commands, performs the requested actions and provides feedback at up to 100 Hz.

One Interface, Many Mobility Platforms

Segway's entire line of RMPs share a single communications structure. This makes it easy to change mobility platforms, even at a late stage in development. If your requirements change you don't have to worry about rewriting your control software; simply swap one RMP for another and keep going.

440 FLEX OMNI

- Roll degree of freedom allows operation over cracks, depressions or bumps of up to 1.5″ without losing 4 points of contact
- Mecanum wheels allow for motion in any planar direction
- Rigid wheels allow for extremely high payload
- Easily configurable length/width
- Highly efficient propulsion system allows for extended runtime
- Ideal for equipment or inventory transport or warehouse applications

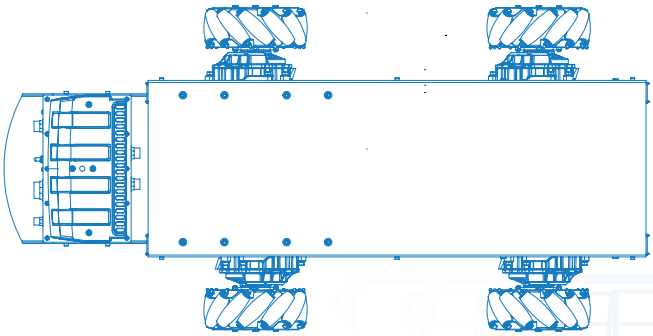

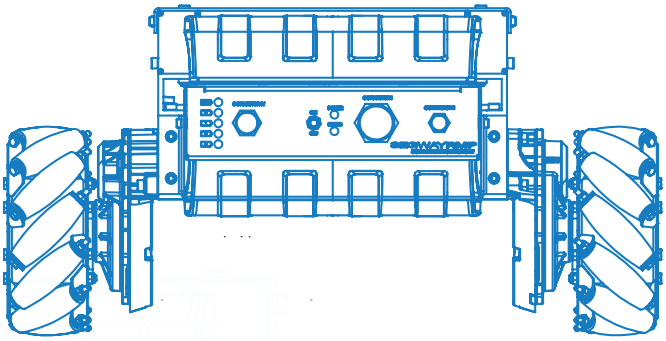

RMP 440 FLEX OMNI SPECS

OVERALL DIMENSIONS	1575 x 789 x 397 mm	**BATTERY CHEMISTRY**	$LiFePO_4$	**MAX SPEED**	2.2 m/s
PLATFORM WEIGHT	128 kg (283 lb)	**RUN TIME**	up to 24 h	**MAX SLOPE**	5°
CLEARANCE	144 mm (5.7 in)	**CHARGE TIME**	2-3 h	**PEAK TORQUE** *(per wheel)*	100 N-m
MAX PAYLOAD	450 kg (1000 lb)	**PROPULSION BATTERY CAPACITY**	1520 Wh	**MAX RANGE**	13 km (8.08 mi)
COMMUNICATION	Ethernet, CAN, USB	**AUXILIARY BATTERY CAPACITY**	380 Wh	**INGRESS PROTECTION**	IP66